CATCO
CATALYTIC HEATER COMPANY

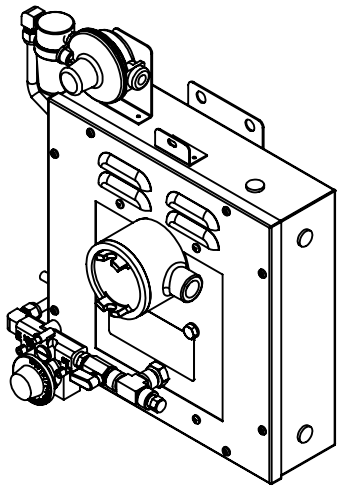

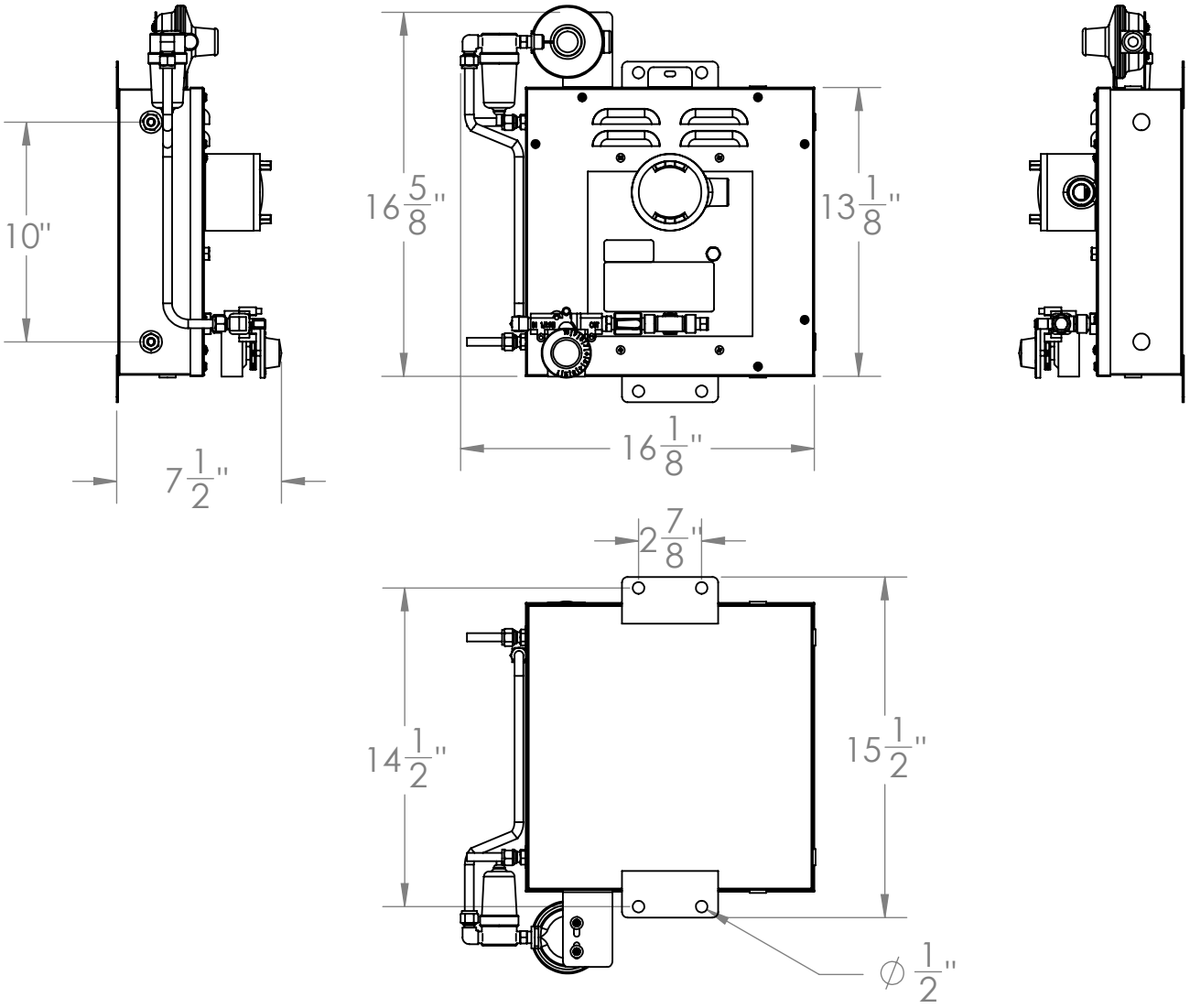

PO Box 188 | Terrell, TX 75160 | 972.563.8065
www.catcoUSA.com | info@catcoUSA.com